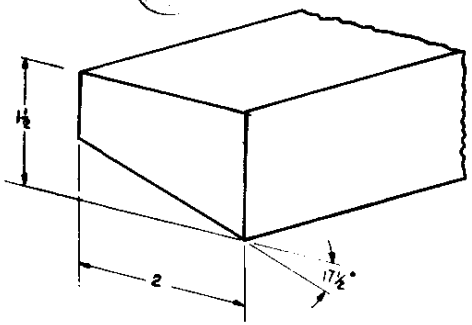

DETAIL "A" OF CROSSMEMBER ITEM 8
TOP CROSSMEMBER SHOWN
BOTTOM CROSSMEMBER INVERTED

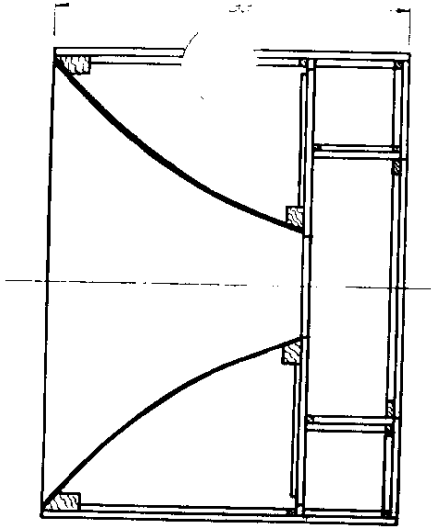

SECT B B

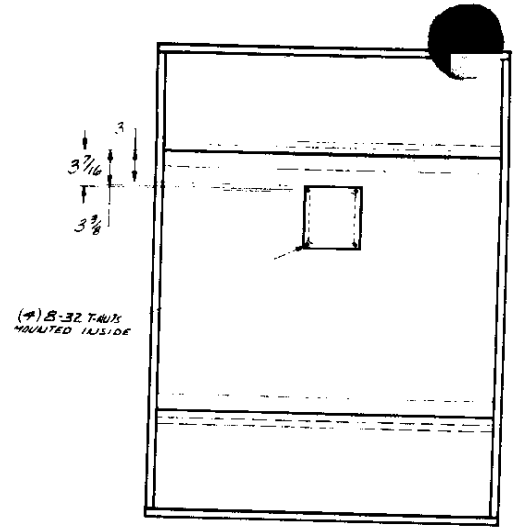

REAR VIEW
WITH REAR PANEL

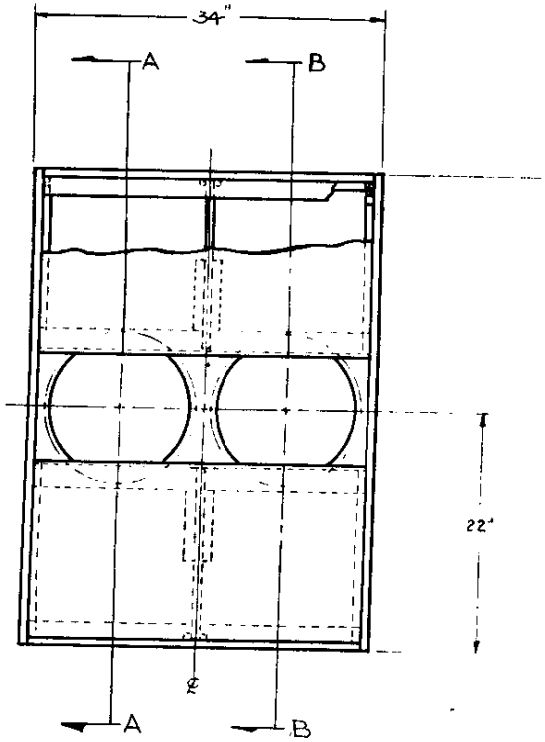

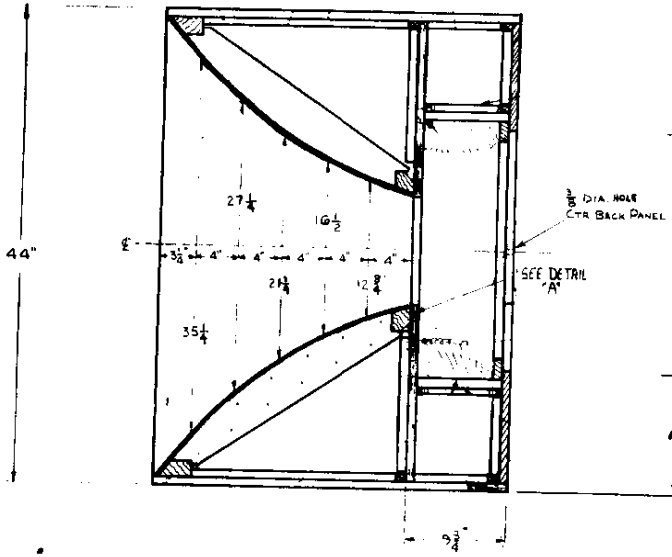

SECTION - A-A

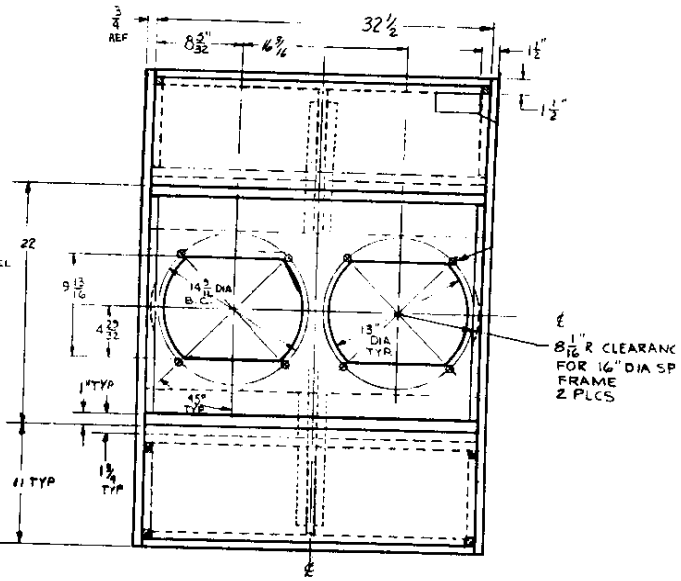

REAR VIEW
REAR PANEL REMOVED

815 Cabinet